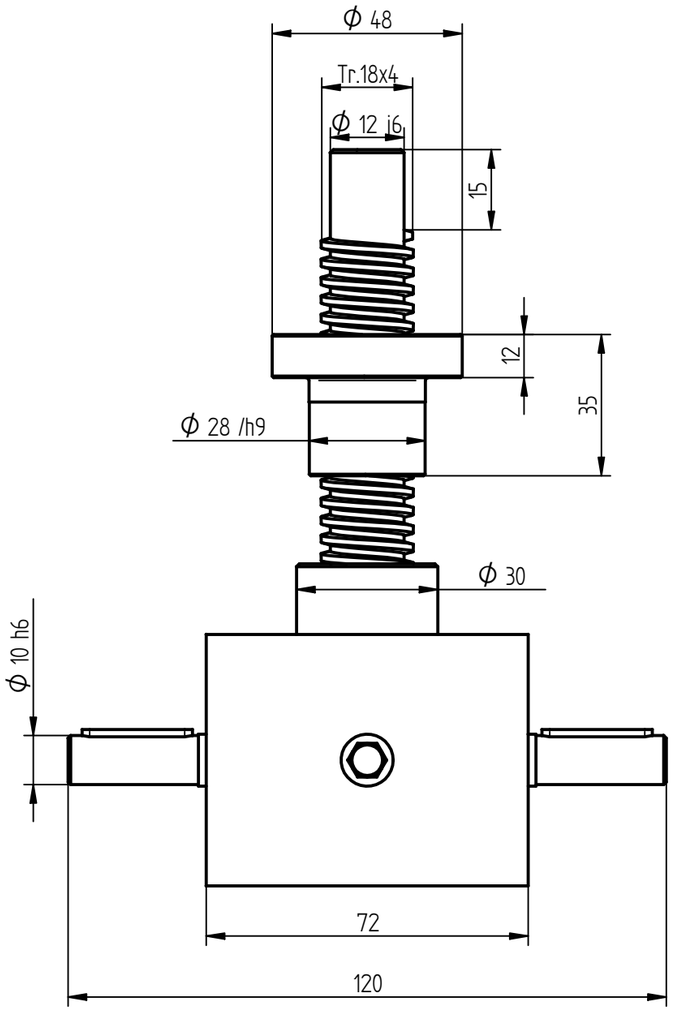
ϕ 48
Tr.18x4
ϕ 12 j6
15
12
35
ϕ 28 /h9
ϕ 30
ϕ 10 h6
72
120

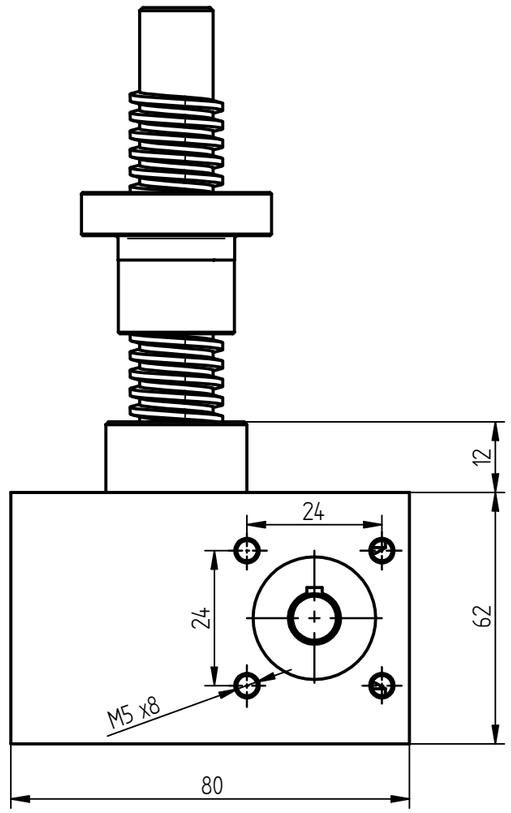
12
24
24
62
M5 x8
80

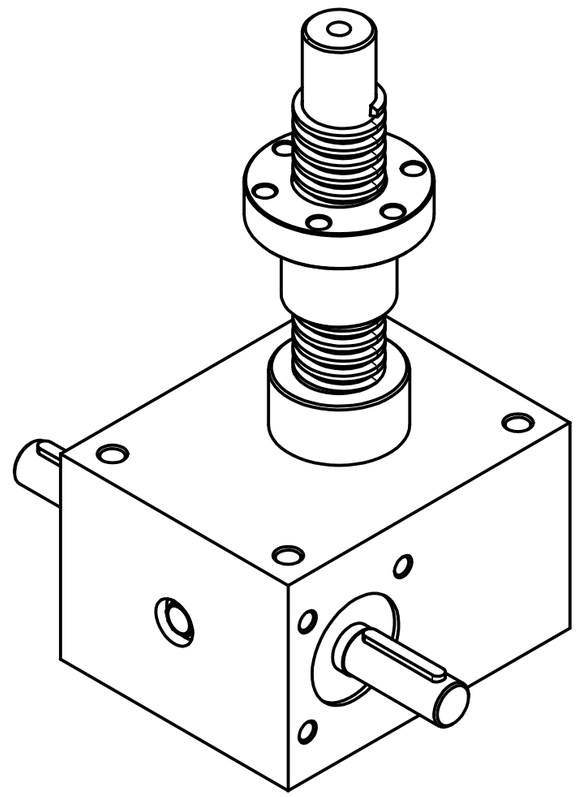

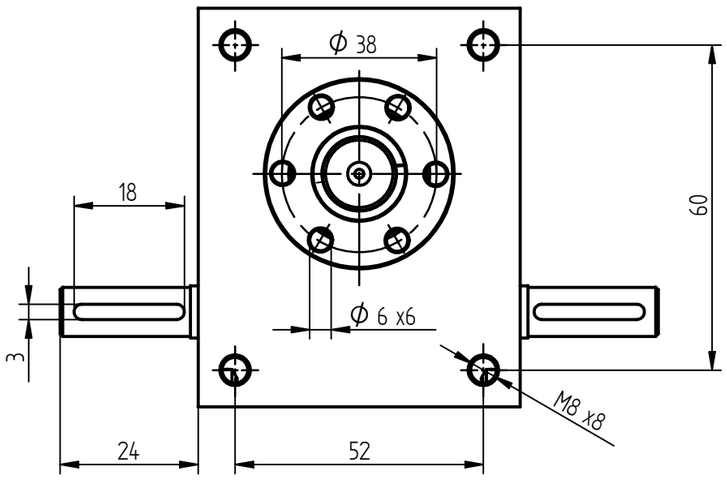
ϕ 38
18
60
ϕ 6 x6
3
M8 x8
24
52